

Ultrasonic direct detection sensor
UB250-F77-E2-V31

- Miniature design
- Program input
- Degree of protection IP67
- Switching status indicator, yellow LED

Ultrasonic direct detection sensor

Dimensions

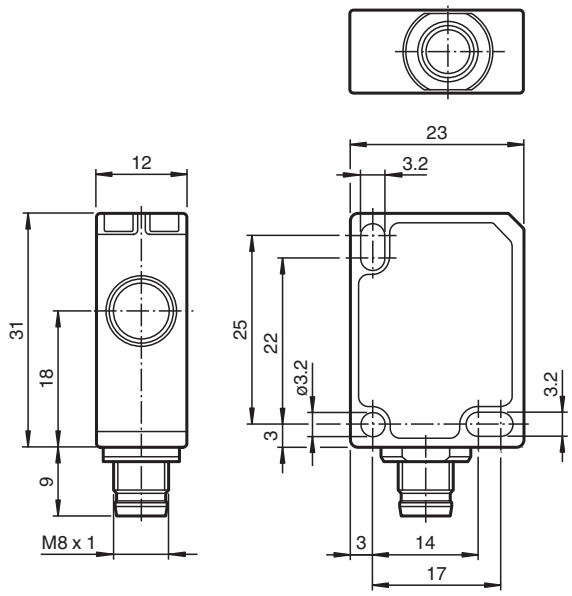

Technical Data

General specifications		
Sensing range		20 ... 250 mm
Adjustment range		45 ... 250 mm
Dead band		0 ... 20 mm
Standard target plate		20 mm x 20 mm
Transducer frequency		approx. 400 kHz
Response delay		≤ 50 ms
Limit data		
Permissible cable length		max. 300 m
Indicators/operating means		
LED yellow		switching state and flashing: Teach-In
Electrical specifications		
Rated operating voltage	U_e	24 V DC
Operating voltage	U_B	20 ... 30 V DC , ripple 10 $\%_{SS}$; 12 ... 20 V DC sensitivity reduced to 90 %

Release date: 2026-06-17 Date of issue: 2026-06-17 Filename: 233250_eng.pdf

Technical Data

No-load supply current	I_0	≤ 20 mA
Time delay before availability	t_v	≤ 150 ms
Input		
Input type		1 program input
Level		low level : 0 ... 0.7 V (Teach-In active) high level : U_B or open input (Teach-In inactive)
Input impedance		16 kΩ
Pulse length		≥ 3 s
Output		
Output type		1 switch output PNP, NO
Rated operating current	I_e	200 mA , short-circuit/overload protected
Voltage drop	U_d	≤ 2 V
Repeat accuracy		± 1 mm
Switching frequency	f	10 Hz
Range hysteresis	H	typ. 2.5 mm
Off-state current	I_r	≤ 0.01 mA
Temperature influence		0.17 %/K
Compliance with standards and directives		
Standard conformity		
Standards		EN IEC 60947-5-2:2020 IEC 60947-5-2:2019
Approvals and certificates		
UL approval		cULus Listed, Class 2 Power Source
CCC approval		CCC approval / marking not required for products rated ≤36 V
Ambient conditions		
Ambient temperature		-25 ... 70 °C (-13 ... 158 °F)
Storage temperature		-40 ... 85 °C (-40 ... 185 °F)
Shock resistance		30 g , 11 ms period
Vibration resistance		10 ... 55 Hz , Amplitude ± 1 mm
Mechanical specifications		
Connection type		M8 x 1 connector , 4-pin
Degree of protection		IP67
Material		
Housing		Polycarbonate
Transducer		epoxy resin/hollow glass sphere mixture; polyurethane foam
Installation position		any position
Mass		10 g
Tightening torque, fastening screws		max. 0.2 Nm
Dimensions		
Height		31 mm
Width		12 mm
Length		23 mm
Factory settings		
Output		Switching point: 250 mm

Release date: 2026-06-17 Date of issue: 2026-06-17 Filename: 233250_eng.pdf

Connection Assignment

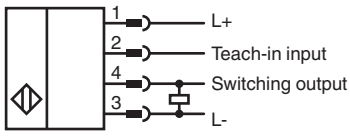

Connection Assignment



Wire colors in accordance with EN 60947-5-2

1	BN	(brown)
2	WH	(white)
3	BU	(blue)
4	BK	(black)

Characteristic Curve

Characteristic response curve

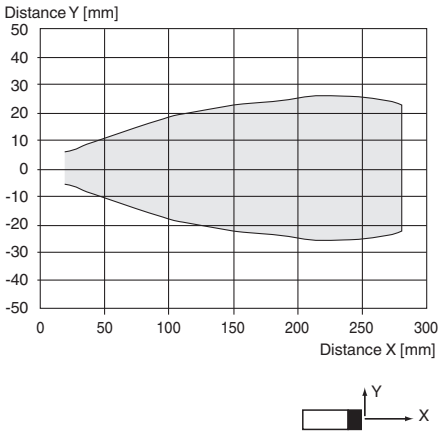

Switch point mode

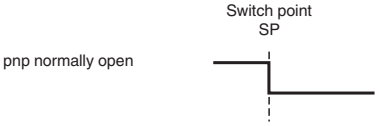

Release date: 2026-06-17 Date of issue: 2026-06-17 Filename: 233250_eng.pdf

Additional Information

Adjustment possibilities

The sensor is equipped with a switching output with 1 adjustable switch point. The switch point is adjusted using the teach-in input of the sensor.

Further Documentation

For information on programming via teach-in input you may refer to the commissioning instruction.

Release date: 2026-06-17 Date of issue: 2026-06-17 Filename: 233250_eng.pdf